MX IMMERSION

WET-MIX

CLASS II DIVISION 2 IMMERSION SYSTEM

STANDARD SPECIFICATIONS: MX364

- TEFC Motor - 460/3/60, 180 CFM, 3 Hp and 78” H2O
- Ruwac Exclusive Maxflo Multi-Stage Turbine
- Class II, Division 2: Groups F & G
- Carbon Impregnated **“BULLETPROOF”** Compression Cast Housing
- Fully Bonded and Grounded
- 44 ft^2 Hydrophobic Filter - 99% Efficient @ 1 Micron
- 2” Vacuum Inlet with Stainless Steel Immersion Tube
- Stainless Steel Demisting Pad and Dispersion Screen
- Continuous Duty Operation
- 12 Gallon Liquid Bath

MX364

PROUDLY MADE IN USA

CLASS II, DIVISION 2

WET-MIX IMMERSION TECHNOLOGY

www.ruwac.com

Ruwac USA

THE FINE DUST EXPERTS

Contact us today for pricing and availability

413-532-4030

available upgrades:

- HEPA Maxx Filter
- Onboard Reclaim System
- Discharge Settling Chamber

Ruwac INDUSTRIAL VACUUM SOLUTIONS

MX364
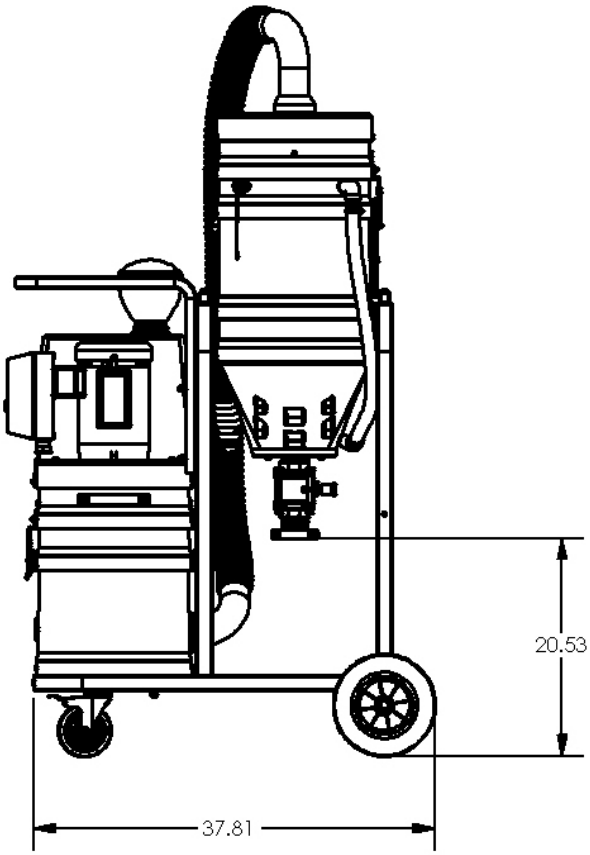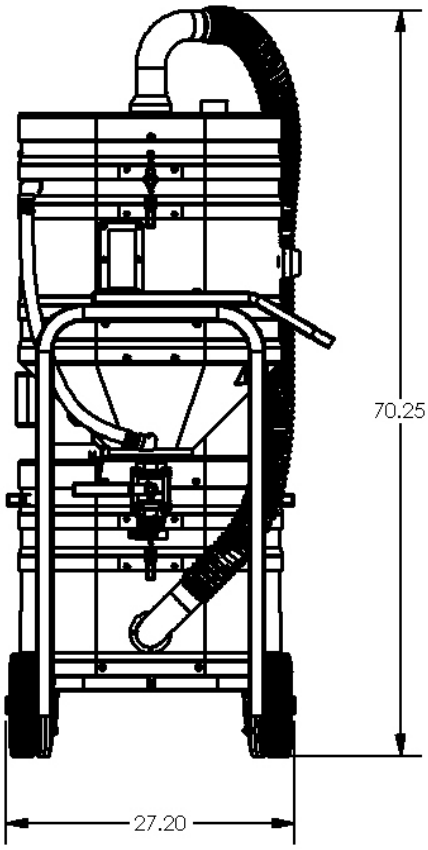
DIMENSIONAL DRAWINGS