POWERHOUSE REGEN

CONTINUOUS DUTY

CLASS II DIVISION 2 LARGE INDUSTRIAL SERIES

STANDARD SPECIFICATIONS: PR56015

- TEFC Motor - 230/460/3/60, 560 CFM, 15 Hp and 110” H20
- Ruwac Regenerative Vacuum Producer - Superior Suction and CFM
- Carbon Impregnated Fiberglass Housing - Static Dissipating
- External Filter Cleaning Mechanism - Dustless Cleaning of Filter
- 48 ft^2 MicroClean Filter - 99% Efficient @ 0.5 Microns
- 4” Vacuum Inlet with Aluminum Cast Deflector
- Class II Division 2 Rated and Continuous Duty Operation
- 24 Gallon Foot Actuated Dustpan for Bulk Collection of Materials

PR56015

PROUDLY MADE IN USA

SUPERIOR

FILTRATION, CAPACITY, PERFORMANCE

www.ruwac.com

Ruwac USA

THE FINE DUST EXPERTS

CONTACT US TODAY FOR PRICING AND AVAILABILITY

413-532-4030

AVAILABLE UPGRADES:

- HEPA SUPER Maxx Filter
99.997% Efficient @ .3 Microns
- Dust Extraction Arm
- Pair with Tubing and Fittings for Central Vacuum Capabilities

Ruwac

INDUSTRIAL VACUUM SOLUTIONS
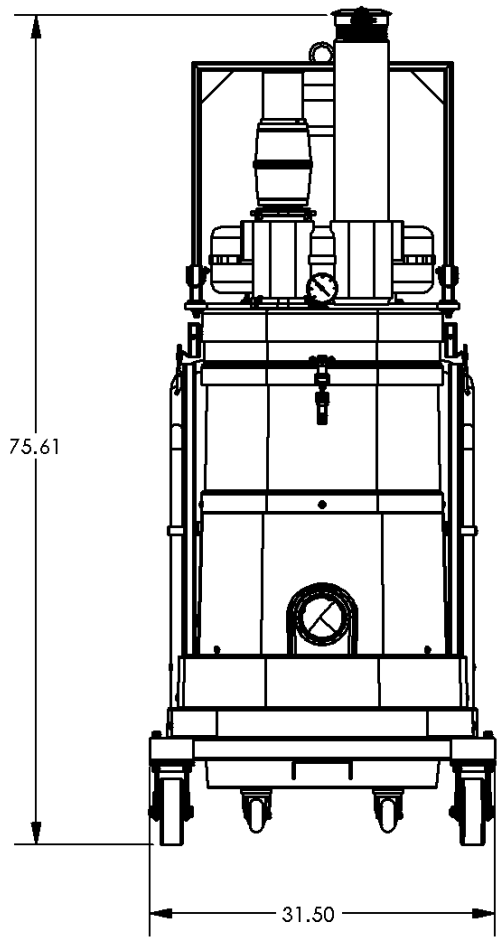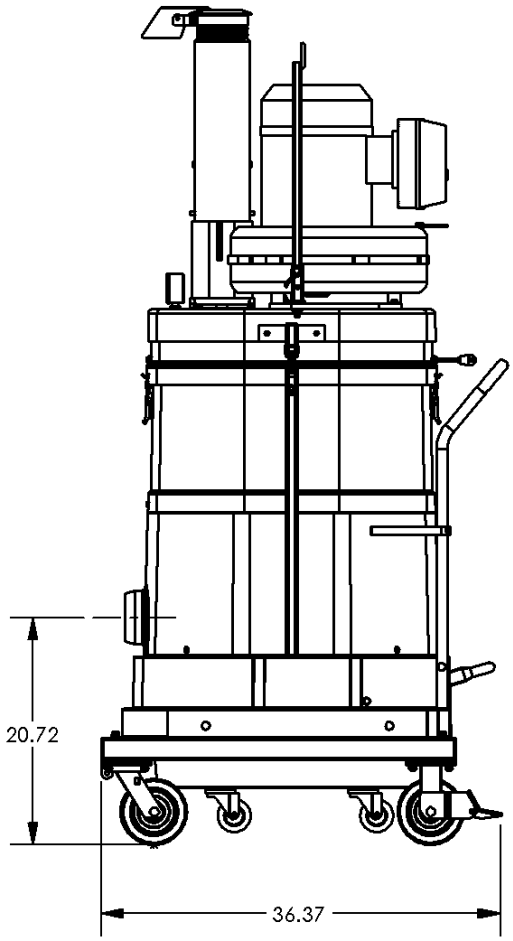
PR56015